Whirlpool

# Service Manual

## Side by Side
## S25B IHS

**Model** S25B IHS
**Version** 8586 165 01000


| | Page |
|---|---|
| Technical data | 2 |
| Spare part list | 3 |
| Exploded view | 5 |
| Circuit and Wiring diagram | 15 |


This documentation is only intended for qualified technicians who are aware of the respective safety regulations.

Date: 05.05.2004 (Mod. 02) Subject to modification
Document-No.: 4812 731 14119

# Technical data

**Factory Code** SB 715 W

**Dimensions**

| | | |
|---|---|---|
| Height | 192.0 | cm |
| Width | 90.2 | cm |
| Depth | 86.4 | cm |

**Capacity**

| | | |
|---|---|---|
| **Total** | | |
| gross | 710 | l |
| net | 644 | l |
| **Cooling** | | |
| gross | 435 | l |
| net | 415 | l |
| **Freezing** | | |
| gross | 275 | l |
| net | 229 | l |

**Electrical connection**

| | | |
|---|---|---|
| Voltage | 220 - 240 | V |
| Frequency | 50 | Hz |

**Power consumption**

| | | |
|---|---|---|
| in 24 hours | 1.71 | kWh |

**Freezing capacity**

| | | |
|---|---|---|
| in 24 hours | 14 | kg |

**Compressor**

| | | |
|---|---|---|
| Type | EGY 100 HLC | |
| Capacity (CECOMAF) | 190 | W |

**Refrigerant**

| | | |
|---|---|---|
| Type | R 134 a | |
| Quantity | 160 | g |

**Thermostat**

Electronic

**Capacity (ice cube machine)**

| | | |
|---|---|---|
| in 24 hours | 2.3 | kg |

**Accessory, WEB-Tablet**

| | |
|---|---|
| Commercial code | 8529 855 15000 |
| EAN Code | 80 03 437 74597 3 |

This spare part is through the sales organisations available

# Spare part list

| | |
|---|---|
| **Model** | **S25B IHS** |
| **Service No.** | **858616501000** |
| **Version** | **858616501000** |

| Pos. No. | 12NC Code | Description |
|---|---|---|
| 012 1 | **4812 528 78061** | Roller rear |
| 012 3 | **4812 528 78059** | Roller front |
| 012 4 | **4812 310 68021** | Key, Wheel kit |
| 040 0 | **4812 417 19105** | Hinge, upper |
| 040 1 | **4812 417 19106** | Hinge, upper |
| 040 2 | **4812 417 19107** | Hinge, bottom |
| 040 4 | **4812 417 19108** | Hinge, bottom |
| 040 6 | **4812 417 19102** | Holder, adjust. bottom |
| 040 7 | **4812 417 78087** | Cover, hinge |
| 040 8 | **4812 417 78086** | Cover, hinge |
| 047 1 | **4812 532 48035** | Bushing door freezing |
| 047 2 | **4812 440 29369** | Cover, door bushing cooling |
| 047 4 | **4812 462 28333** | Stopper, door freezer |
| 047 8 | **4819 528 38428** | Cam, door |
| 070 0 | **4812 464 88042** | Plinth |
| 084 3 | **4812 404 18386** | Rubber fan motor |
| 101 0 | **4812 416 18728** | Door, freezer |
| 104 0 | **4812 416 18731** | Door, refriger. |
| 105 4 | **4812 404 68029** | Bracket |
| 111 0 | **4812 462 68847** | Door handle cooling |
| 111 1 | **4812 462 68846** | Door handle freezing |
| 111 2 | **4812 462 28429** | Stopper door handle, ref.freezing |
| 111 3 | **4812 462 28428** | Stopper door handle, ref.freezing |
| 111 4 | **4812 462 28426** | Support door handle |
| 111 5 | **4812 462 28431** | Support door handle, ref. freezing |
| 111 7 | **4812 459 18218** | Nameplate |
| 131 0 | **4812 440 78955** | Lever |
| 131 1 | **4812 440 78954** | Lever |
| 131 2 | **4812 440 10678** | Flap, icemaker, with heater |
| 131 3 | **4819 021 80224** | Hopper icecubes, fannel |
| 131 4 | **4812 440 69075** | Mechanism Ice Dispenser |
| 131 7 | **4819 021 80223** | Delay |
| 131 8 | **4819 021 80210** | Pin |
| 151 0 | **4812 418 28369** | Profile |
| 152 2 | **4812 418 28366** | Door, dairy |
| 153 0 | **4812 418 28371** | Flap, door dairy |
| 153 3 | **4812 418 28372** | Bottle shelf |
| 154 0 | **4812 418 28375** | Door, dairy |
| 154 1 | **4812 418 28374** | Separator |
| 154 2 | **4812 404 78552** | Bushing door dairy |
| 154 3 | **4812 462 28424** | Stopper |
| 154 4 | **4812 418 28373** | Holder, bottles upper |
| 154 6 | **4812 418 28376** | Holder, bottles bottom |
| 154 9 | **4812 418 28377** | Door, dairy |
| 155 0 | **4819 418 79054** | Rack, egg |
| 160 0 | **4812 404 48862** | Support |
| 191 0 | **4812 466 88676** | Magnetic seal cooling |
| 191 1 | **4812 466 88677** | Magnetic seal freezing |
| 201 7 | **4819 466 69949** | Gasket |
| 233 2 | **4812 404 48697** | Support grid |
| 239 2 | **4812 440 98124** | Support flap |
| 239 4 | **4812 440 69204** | Cover, icemaker |
| 239 5 | **4812 418 28419** | Ice maker |
| 239 7 | **4812 418 28368** | Container ice |
| 239 8 | **4812 418 28367** | Container, ice, cpl. |

| Pos. No. | 12NC Code | Description |
|---|---|---|
| 241 0 | **4812 458 19139** | Basket top |
| 241 1 | **4812 458 19137** | Basket bottom |
| 241 3 | **4812 440 69202** | Insert basket |
| 241 5 | **4812 460 49303** | Trim basket |
| 241 8 | **4812 458 19138** | Basket center |
| 242 0 | **4812 418 48585** | Drawer bottom |
| 242 1 | **4812 418 48583** | Drawer top |
| 242 3 | **4812 418 48584** | Drawer center |
| 245 5 | **4812 458 38086** | Grid top |
| 245 6 | **4812 458 19136** | Grid center |
| 245 8 | **4812 458 28018** | Basket |
| 245 9 | **4812 440 79028** | Grid, water disp |
| 249 0 | **4812 460 49299** | Trim |
| 249 1 | **4812 460 49283** | Trim basket |
| 249 2 | **4812 460 49284** | Trim |
| 249 3 | **4812 460 49302** | Trim |
| 249 4 | **4812 460 49282** | Trim glass plate |
| 249 9 | **4812 460 49288** | Trim |
| 251 0 | **4812 380 28027** | Reflector cooling |
| 251 1 | **4812 440 98122** | Cover f. lamp cooling |
| 251 4 | **4812 404 18387** | Gasket lamp |
| 251 5 | **4812 460 49289** | Trim |
| 251 7 | **4812 440 79048** | Cover f. lamp |
| 251 8 | **4812 380 28028** | Lid, lamp |
| 251 9 | **4812 440 98125** | Cover f. lamp freezer |
| 252 0 | **4812 440 29367** | Lampholder, lamp |
| 253 1 | **4812 462 79645** | Cover Switch |
| 255 1 | **4812 450 88108** | Glass shelf |
| 255 4 | **4812 450 88109** | Glass shelf |
| 255 5 | **4812 450 88111** | Glass shelf top |
| 255 7 | **4812 450 58716** | Frame |
| 255 8 | **4812 450 58715** | Frame |
| 255 9 | **4812 450 58717** | Frame |
| 256 0 | **4812 460 58384** | Slide air inlet |
| 256 5 | **4819 466 98997** | Rail air inlet |
| 261 0 | **4812 462 38139** | Slide right |
| 261 1 | **4812 462 38138** | Slide left |
| 261 2 | **4812 462 38153** | Slide left |
| 261 3 | **4812 462 38154** | Slide right |
| 263 6 | **4812 462 38155** | Guide right |
| 263 7 | **4812 460 98041** | Guide icemaker |
| 263 8 | **4812 404 48702** | Stud |
| 263 9 | **4812 404 48701** | Stud |
| 304 0 | **4812 418 88995** | Support, electrical parts |
| 320 0 | **4812 453 88028** | Control cover compl. w. electr. |
| 324 6 | **4812 442 29184** | Air diffuser |
| 400 0 | **4812 028 58341** | Motor, ice conveyor |
| 402 0 | **4812 360 38837** | Compressor EGY 100 HLC CP |
| 402 1 | **4812 418 28424** | Cup, thaw water |
| 402 2 | **4819 360 48014** | Valve flap |
| 402 4 | **4819 492 68712** | Clip, fix f. compressor |
| 406 2 | **4812 440 89009** | Housing icemaker |
| 406 3 | **4812 492 98032** | Spring icemaker |
| 406 6 | **4812 440 79024** | Support, motor |
| 406 7 | **4812 440 79023** | Cover |

# Spare part list

| | |
|---|---|
| **Model** | **S25B IHS** |
| **Service No.** | **858616501000** |
| **Version** | **858616501000** |

| Pos. No. | 12NC Code | Description |
|---|---|---|
| 406 8 | **4812 530 88024** | Shaft gear |
| 407 0 | **4812 404 78554** | Fastener |
| 407 1 | **4812 310 28142** | Bushing for shaft kit |
| 411 0 | **4812 462 48407** | Grommet compressor |
| 420 0 | **4812 120 28023** | Capacitor |
| 420 3 | **4819 021 58826** | Damper |
| 420 4 | **4812 442 29019** | Insulator |
| 437 0 | **4812 218 48049** | Sensor, emitter |
| 438 0 | **4812 217 28001** | Receiver |
| 440 1 | **4819 360 58609** | Valve |
| 440 3 | **4812 445 28021** | Air diffuser, + motor |
| 440 4 | **4812 462 38141** | Slide |
| 440 5 | **4819 021 82147** | Grid, air |
| 440 6 | **4819 462 38778** | Slide |
| 440 7 | **4812 452 98253** | Insulator |
| 441 0 | **4812 028 58342** | Motor |
| 441 1 | **4819 462 48418** | Grommet compressor |
| 441 2 | **4812 440 68962** | Support, right |
| 441 5 | **4812 440 68963** | Support, left |
| 442 0 | **4812 361 38067** | Motor, fan |
| 442 1 | **4819 404 78682** | Bracket |
| 443 0 | **4819 515 48057** | Fan blade |
| 443 1 | **4812 440 79018** | Holder ventilator |
| 451 0 | **4819 021 88177** | Element defrost |
| 451 1 | **4819 401 18692** | Clamp |
| 491 0 | **4812 290 88087** | Cover connection block |
| 526 2 | **4812 440 79019** | Control board + housing |
| 526 5 | **4812 440 29368** | Lid, electronic box |
| 561 0 | **4812 280 38036** | Protect, motor |
| 561 2 | **4812 440 79022** | Cover overload |
| 562 0 | **4812 320 58132** | Cable harness, Bi-metal thermo. |
| 571 0 | **4812 360 58283** | Valve, inlet |
| 614 0 | **4812 290 68262** | PTC-Unit |
| 620 1 | **4812 277 88002** | Switch |
| 620 4 | **4819 276 18157** | Switch light |
| 621 0 | **4819 271 38044** | Microswitch icemaker + dispenser |
| 626 1 | **4819 442 78119** | Deflector |
| 651 0 | **4812 134 28078** | Lamp |
| 651 2 | **4812 134 28077** | Lamp, dispenser unit |
| 652 4 | **4819 021 80200** | Holder, lamp dispenser |
| 691 4 | **4812 404 78553** | Support sensor |
| 691 7 | **4812 310 18846** | Sensor KIT |
| 701 0 | **4812 548 28016** | Fitting |
| 702 0 | **4812 530 29195** | Hose |
| 711 0 | **4812 530 28999** | Reservoir |
| 740 0 | **4812 511 38215** | Condenser |
| 743 1 | **4812 440 98121** | Cover, air diffuser |
| 745 0 | **4812 360 38648** | Evaporator |
| 745 2 | **4812 440 79025** | Cover evaporator |
| 745 4 | **4819 492 68684** | Clip |
| 745 6 | **4819 021 49294** | Heat shield evaporator |
| 746 1 | **4812 440 79047** | Air guide |
| 746 2 | **4812 440 69203** | Cover evaporator |
| 746 3 | **4812 440 98062** | Gasket air guide |
| 764 0 | **4819 480 28144** | Dryer |

| Pos. No. | 12NC Code | Description |
|---|---|---|
| 781 0 | **4812 462 28134** | Cap |
| 781 1 | **4812 535 48013** | Clutch waterhose |
| 781 3 | **4812 530 29157** | Adapter hose, 3/4" |
| 781 7 | **4812 466 88646** | Clutch, icemaker |
| 781 8 | **4812 817 28986** | Filter, water SxS |
| 781 9 | **4812 418 28379** | Filter body |
| 783 1 | **4812 530 29254** | Hose |
| 783 8 | **4812 530 29159** | Hose, inlet |
| 783 9 | **4812 530 29158** | Hose, connection filter / inlet valve |
| 785 0 | **4812 530 29162** | Tube |
| 900 5 | **4819 492 68544** | Clip, fix |
| 900 7 | **4819 492 68683** | Clip heating element |
| 900 8 | **4819 492 69522** | Clip |
| 910 9 | **4819 505 18249** | Nut water reservoir |
| 911 7 | **4819 505 18256** | Nut icemaker hose |
| 912 4 | **4812 560 18063** | Screw |
| 912 5 | **4812 560 18064** | Screw |
| 913 2 | **4812 560 18013** | Screw, freezer door |
| 913 3 | **4812 560 18011** | Screw, freezer door |
| 913 4 | **4812 500 18096** | Bolt |
| 913 5 | **4812 500 18093** | Spindle, thread, rear |
| 913 6 | **4819 004 89478** | Screw |
| 913 7 | **4812 502 18578** | Screw |
| 930 0 | **4819 021 80209** | Spring icemaker |
| 930 1 | **4819 021 94719** | Rail |
| 930 2 | **4812 418 88043** | Strain relief |
| 962 1 | **4812 440 79026** | Cover, Cable harness |
| 962 2 | **4812 460 49343** | Holder |

## Exploded view

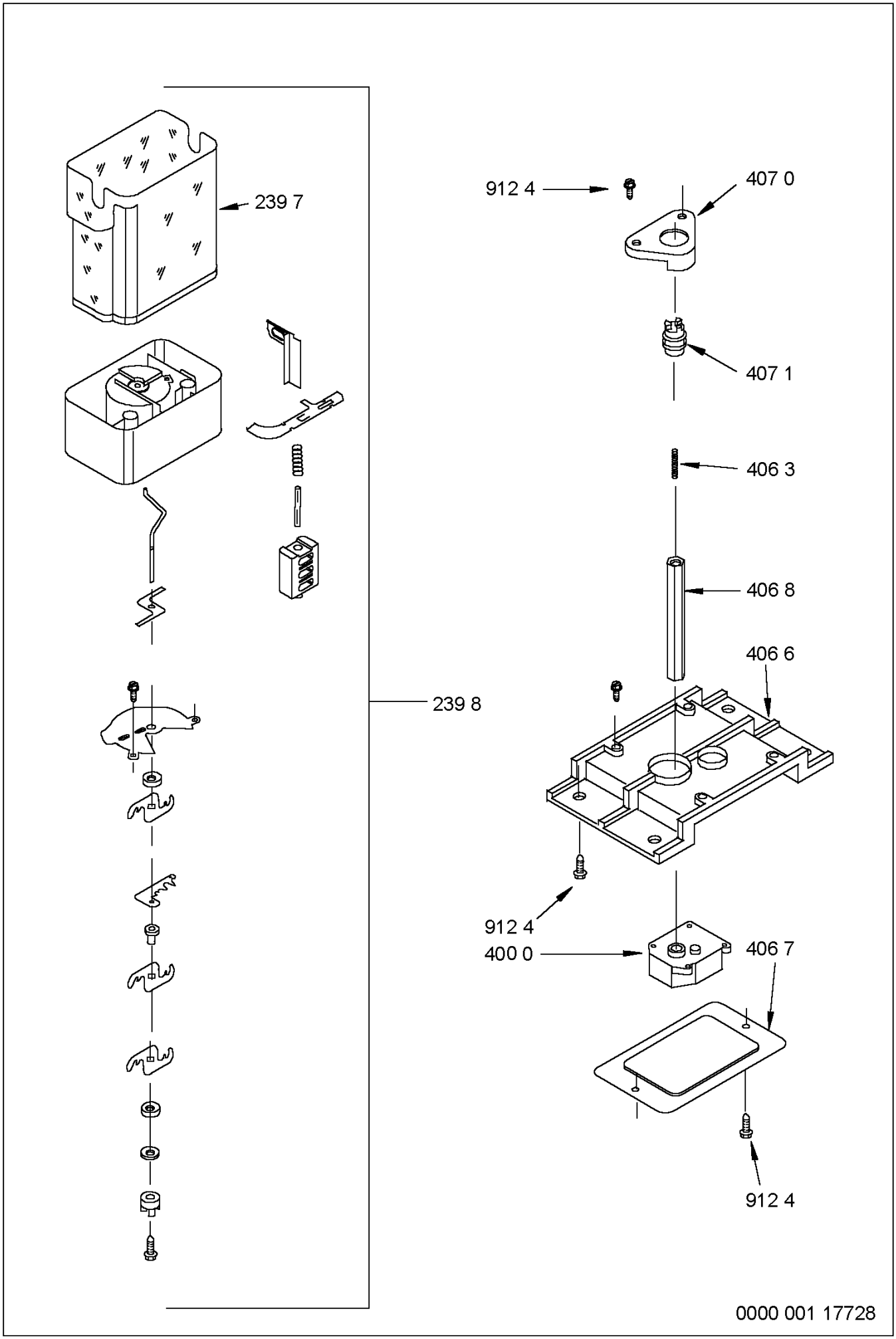

## Exploded view

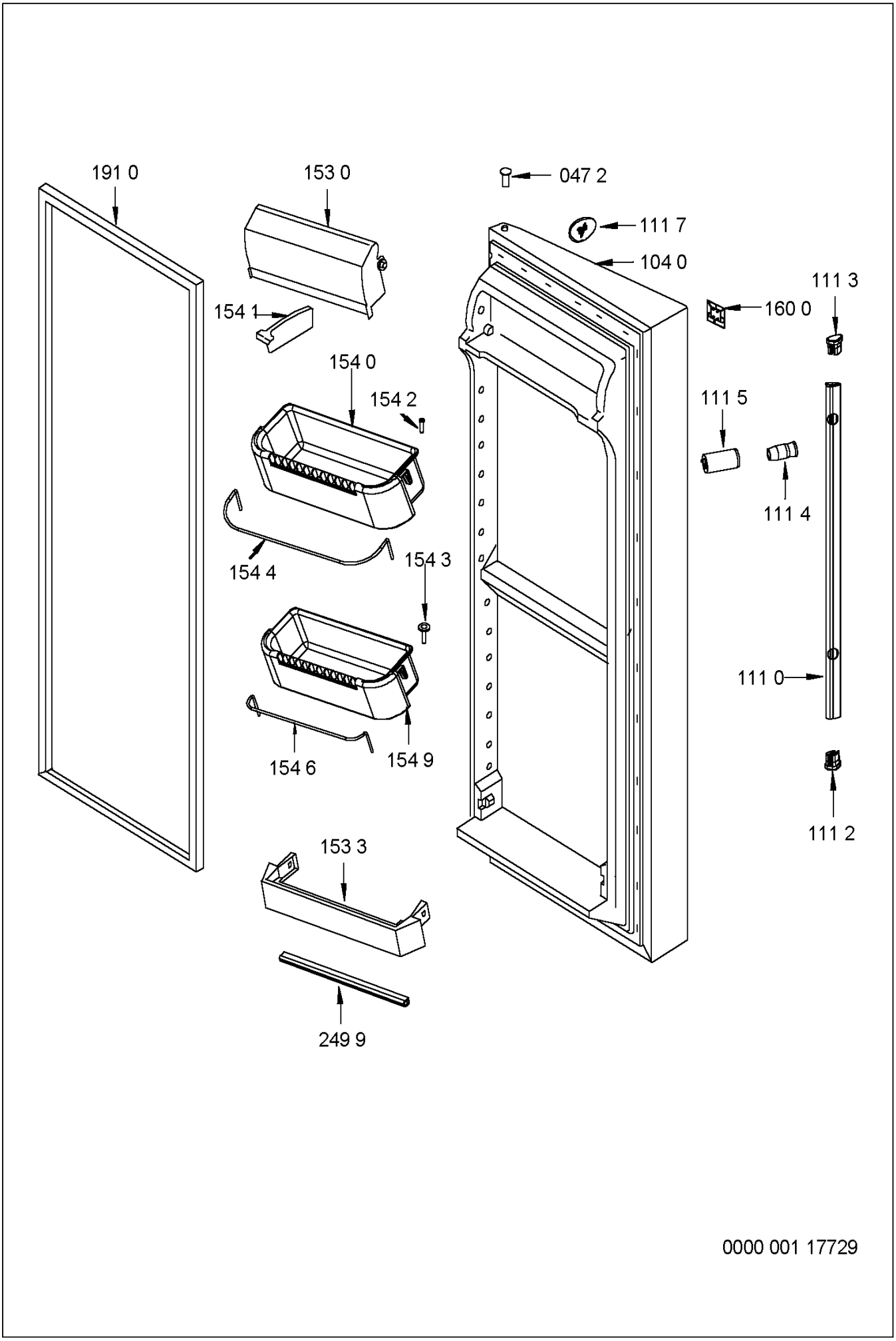

## Exploded view

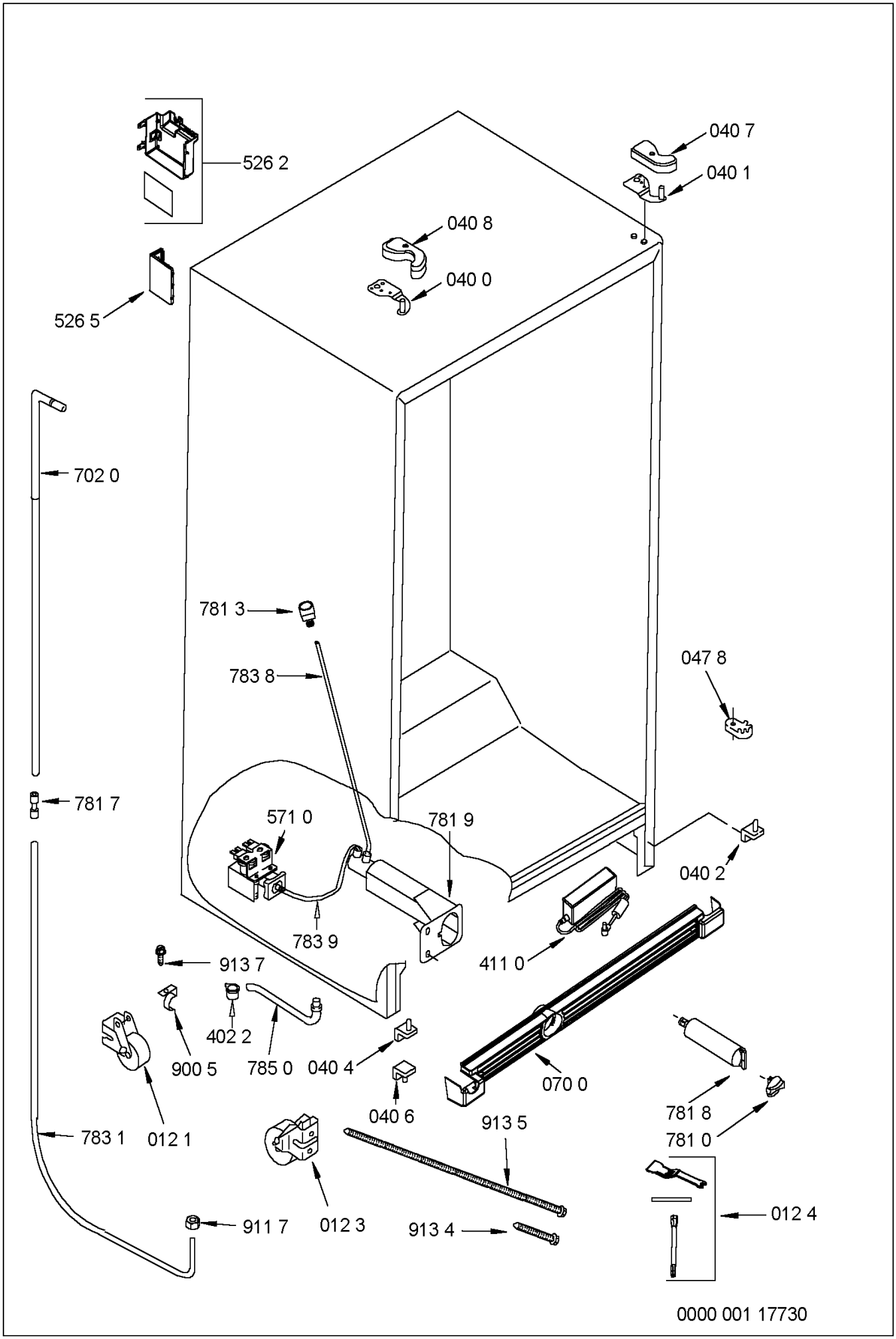

## Exploded view

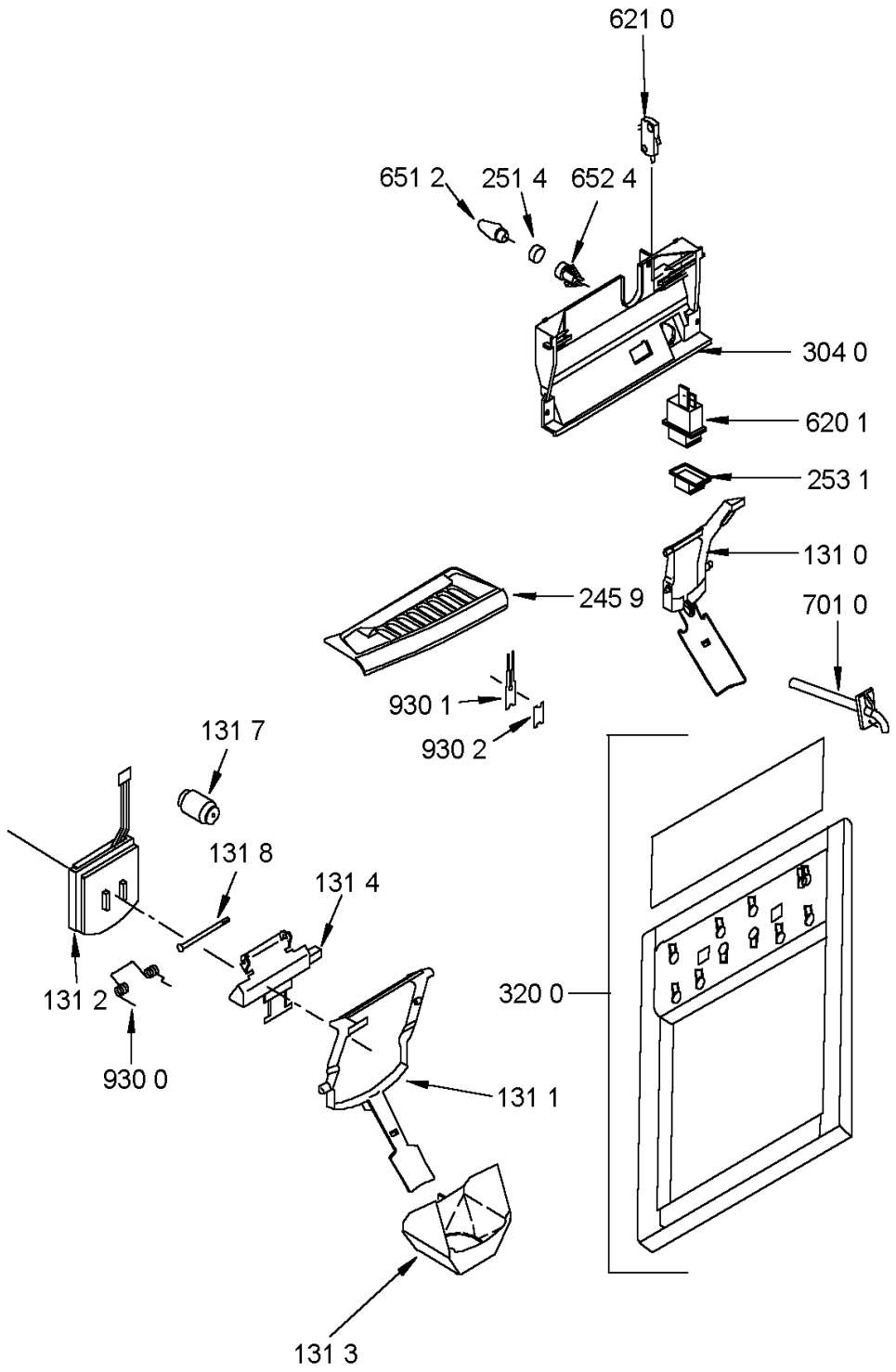


0000 001 17731

## Exploded view

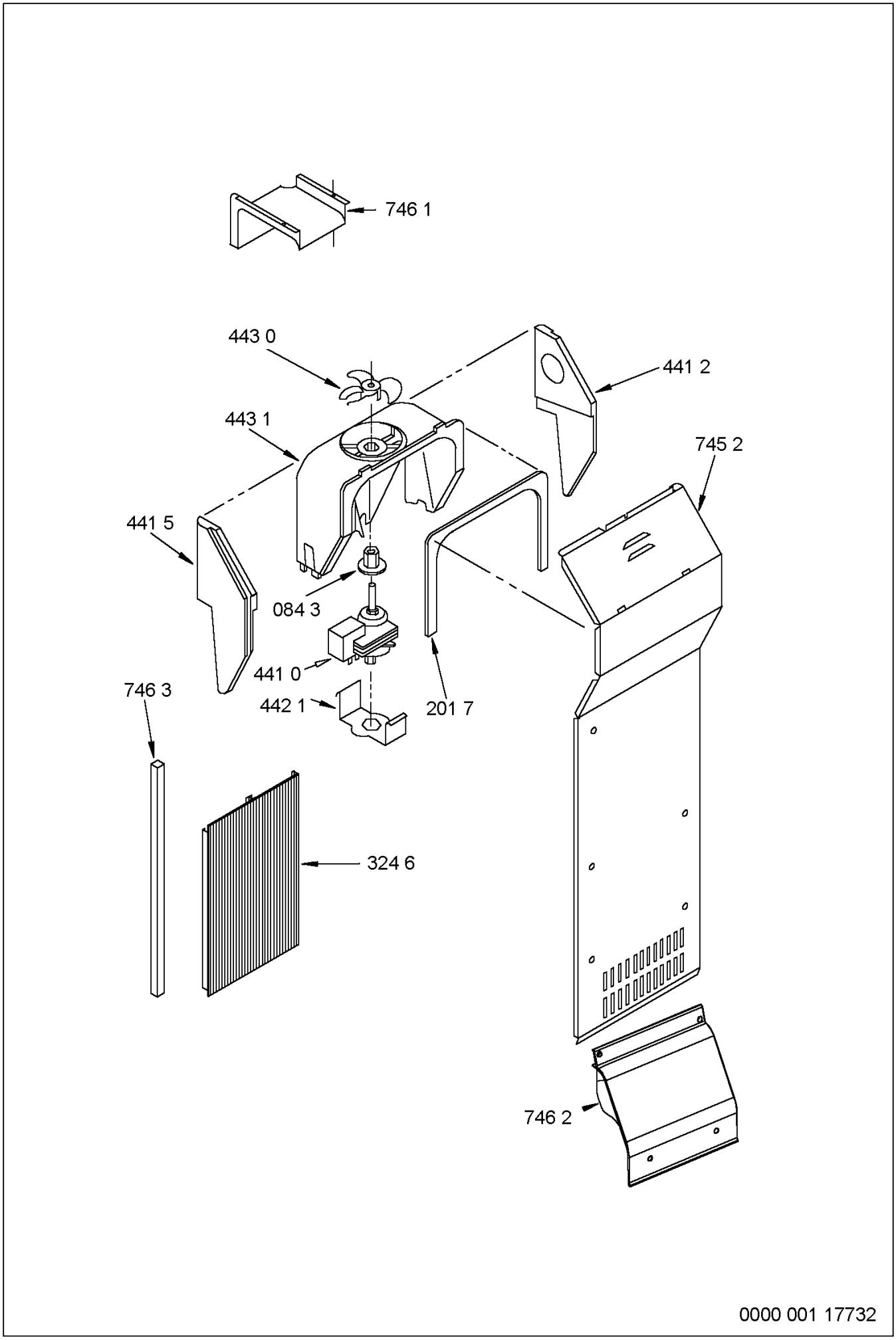

## Exploded view

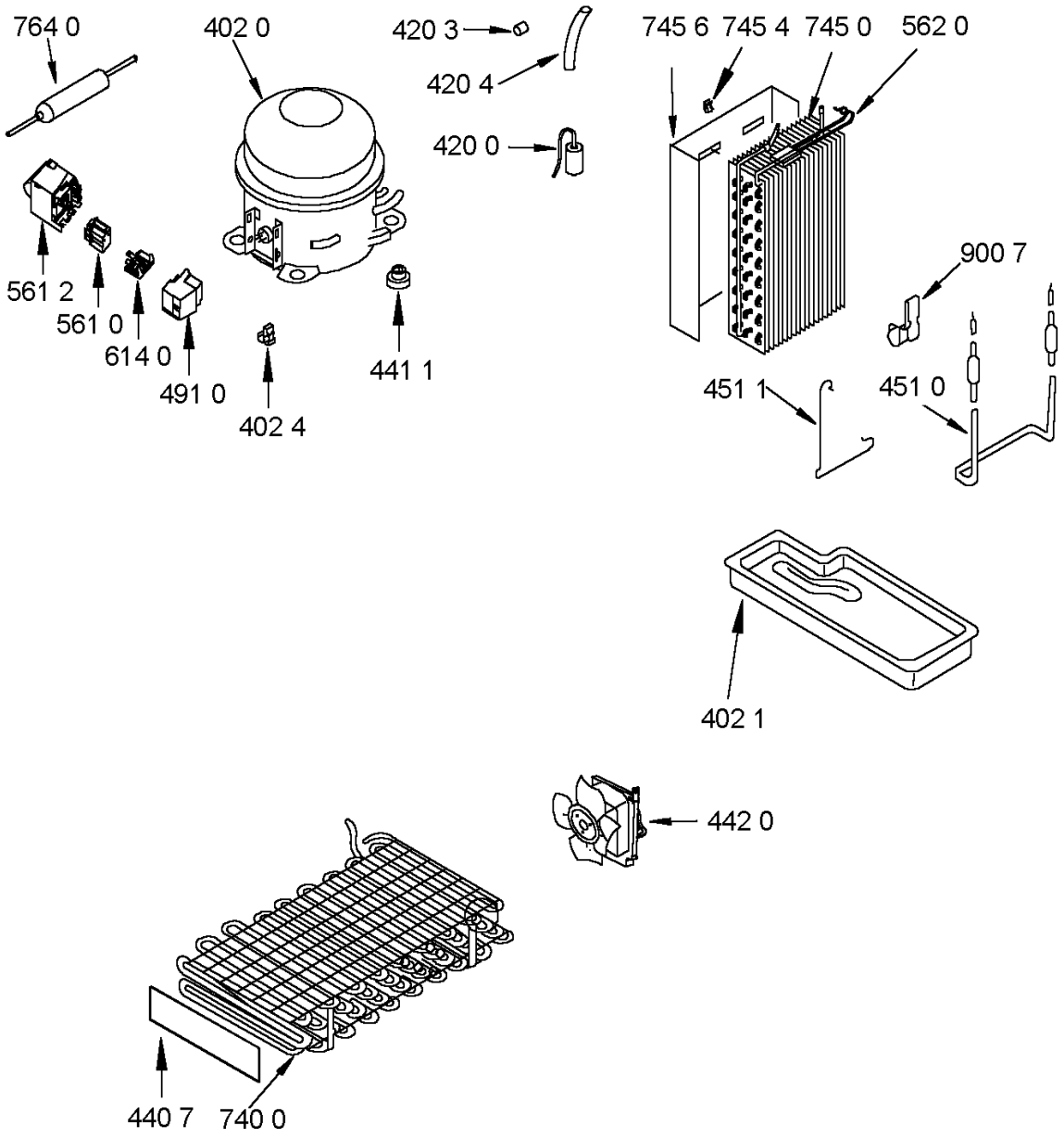


0000 001 17735

## Exploded view

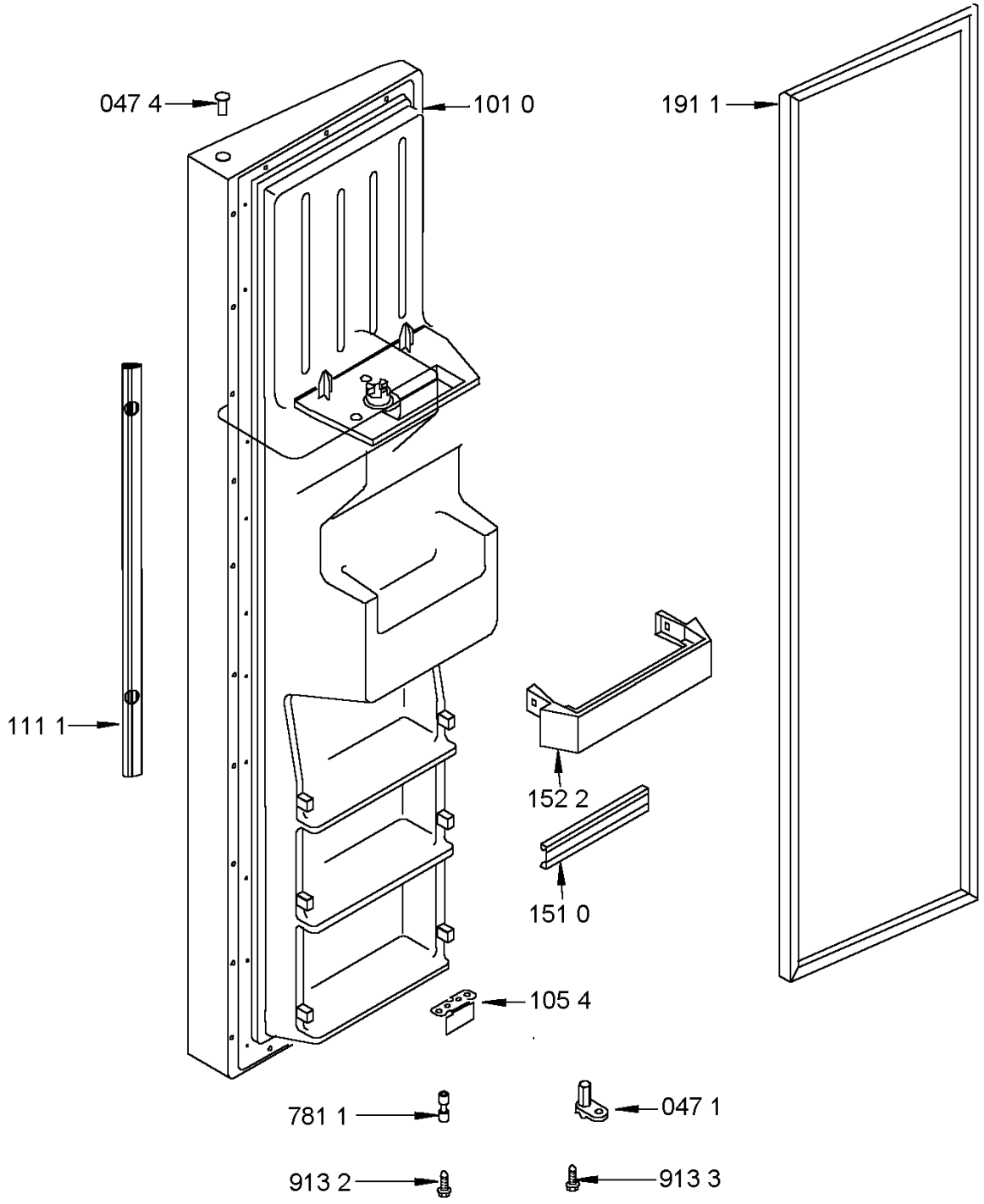


0000 001 17843

## Exploded view

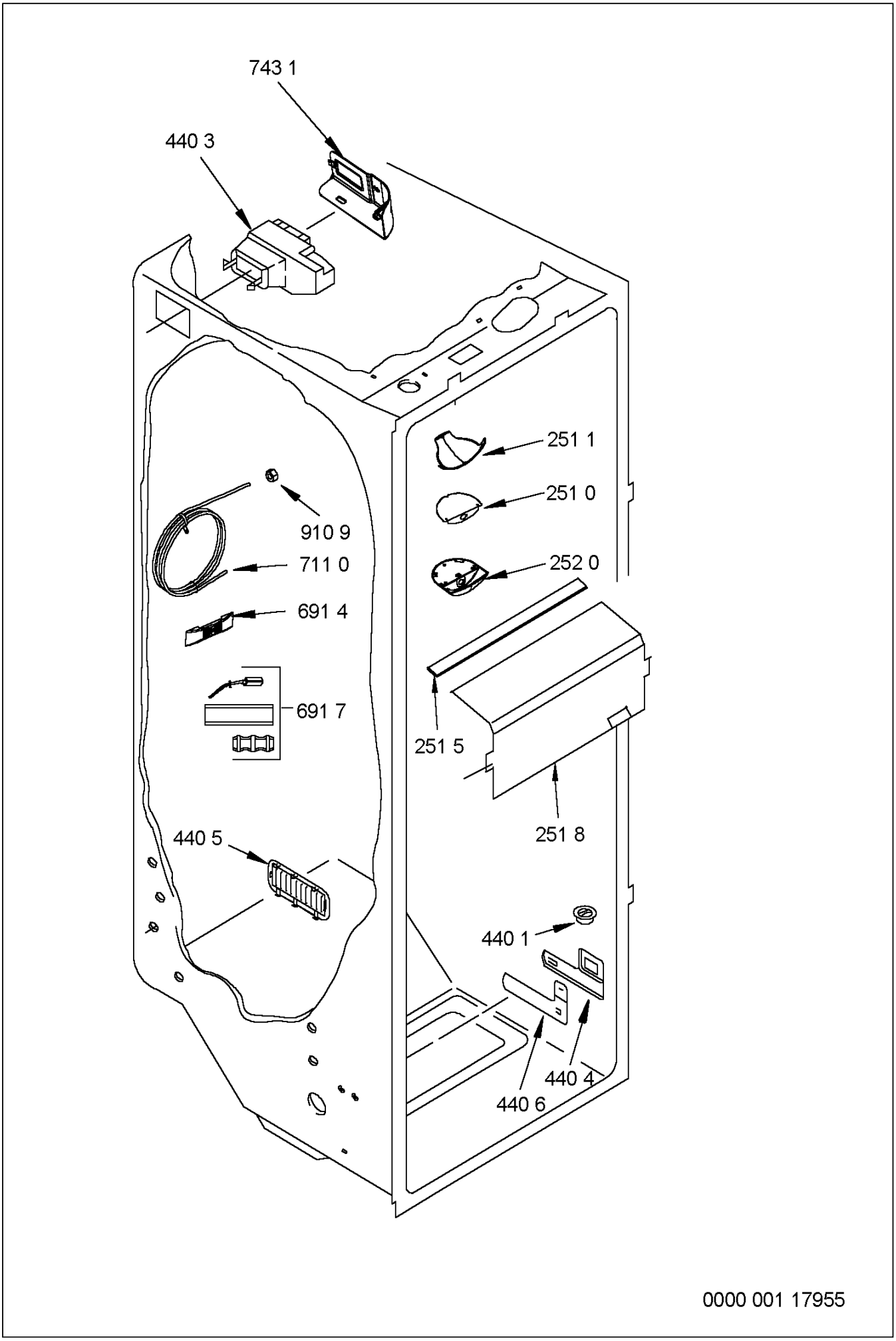

## Exploded view

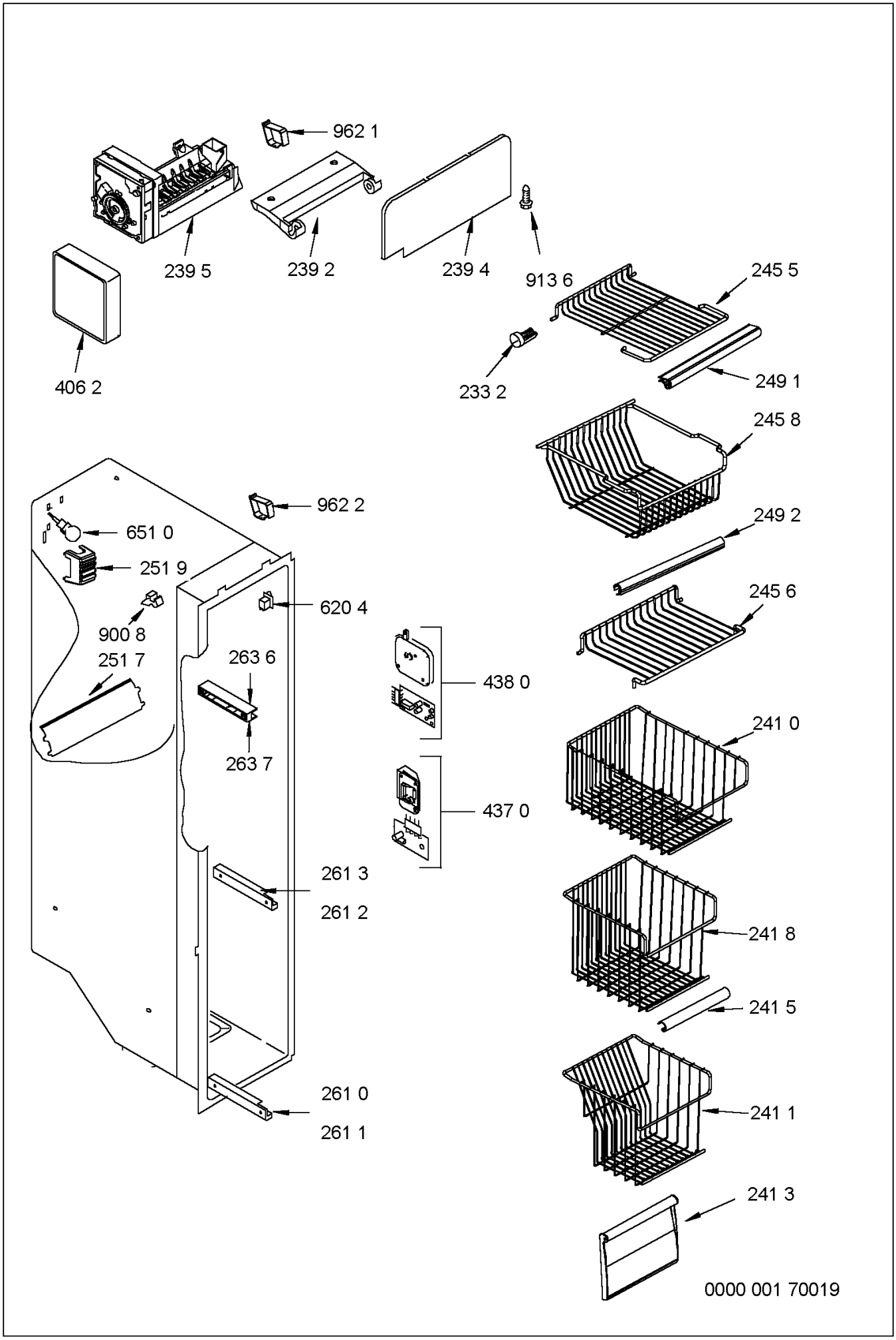

## Exploded view

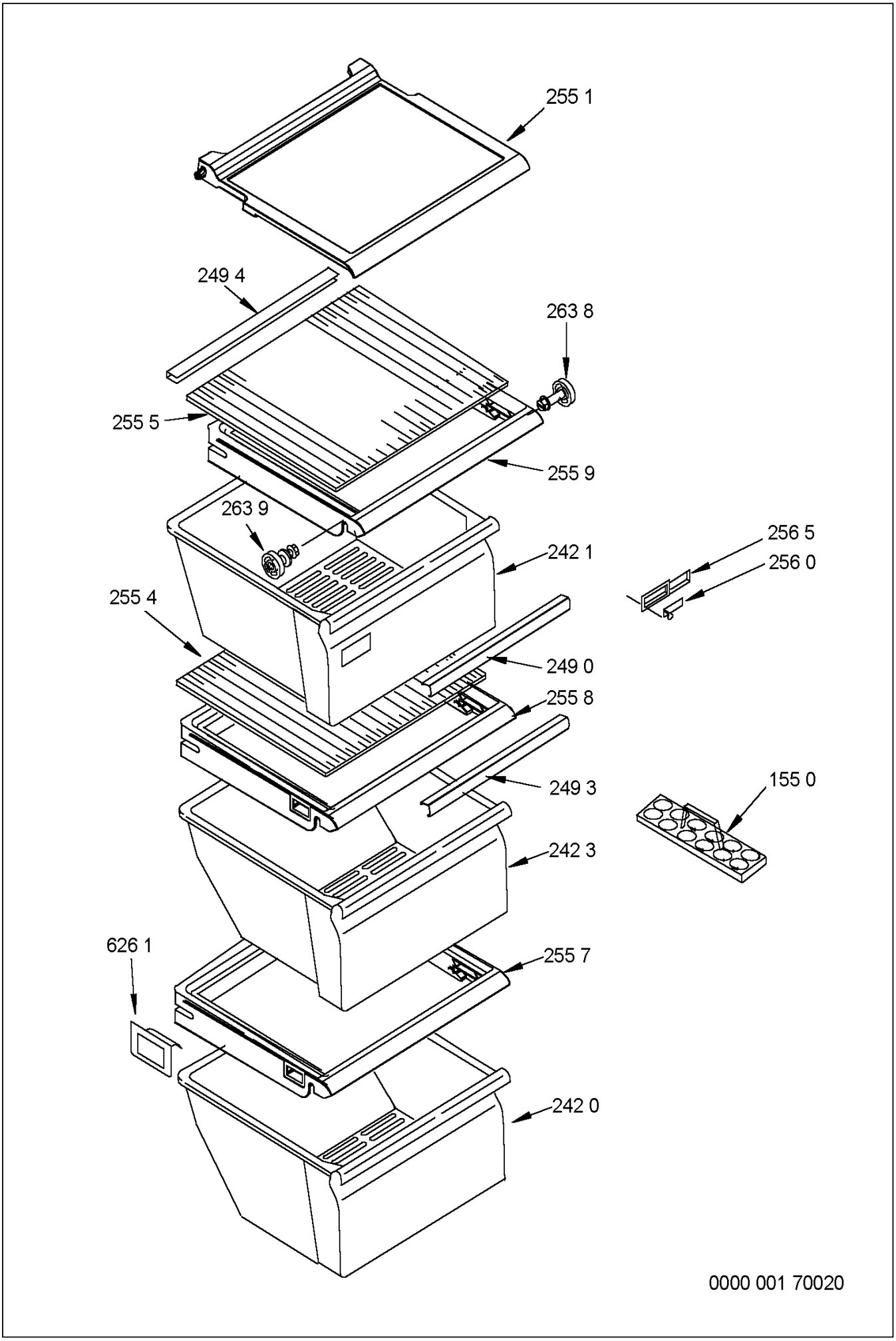

## Circuit and Wiring diagram

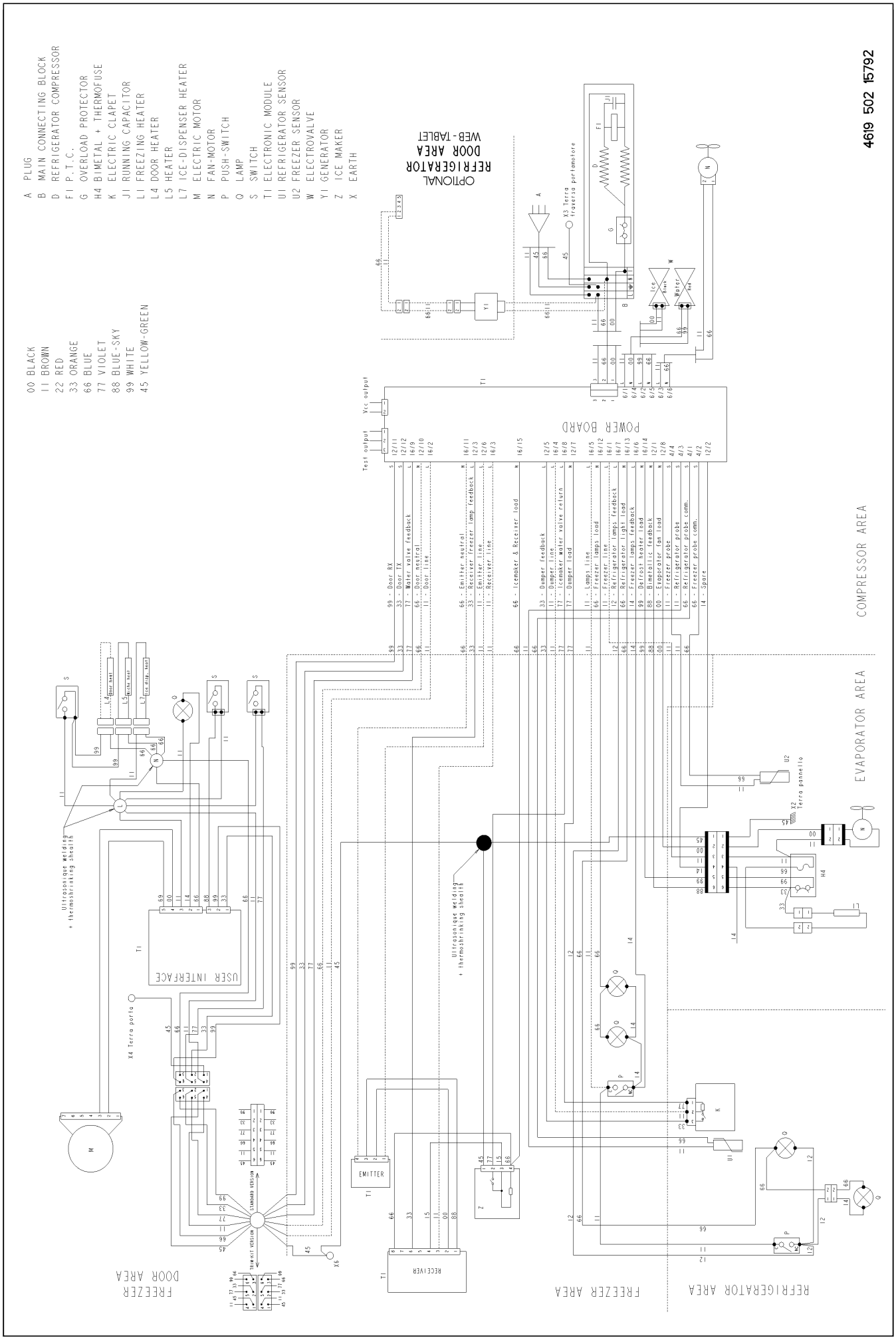
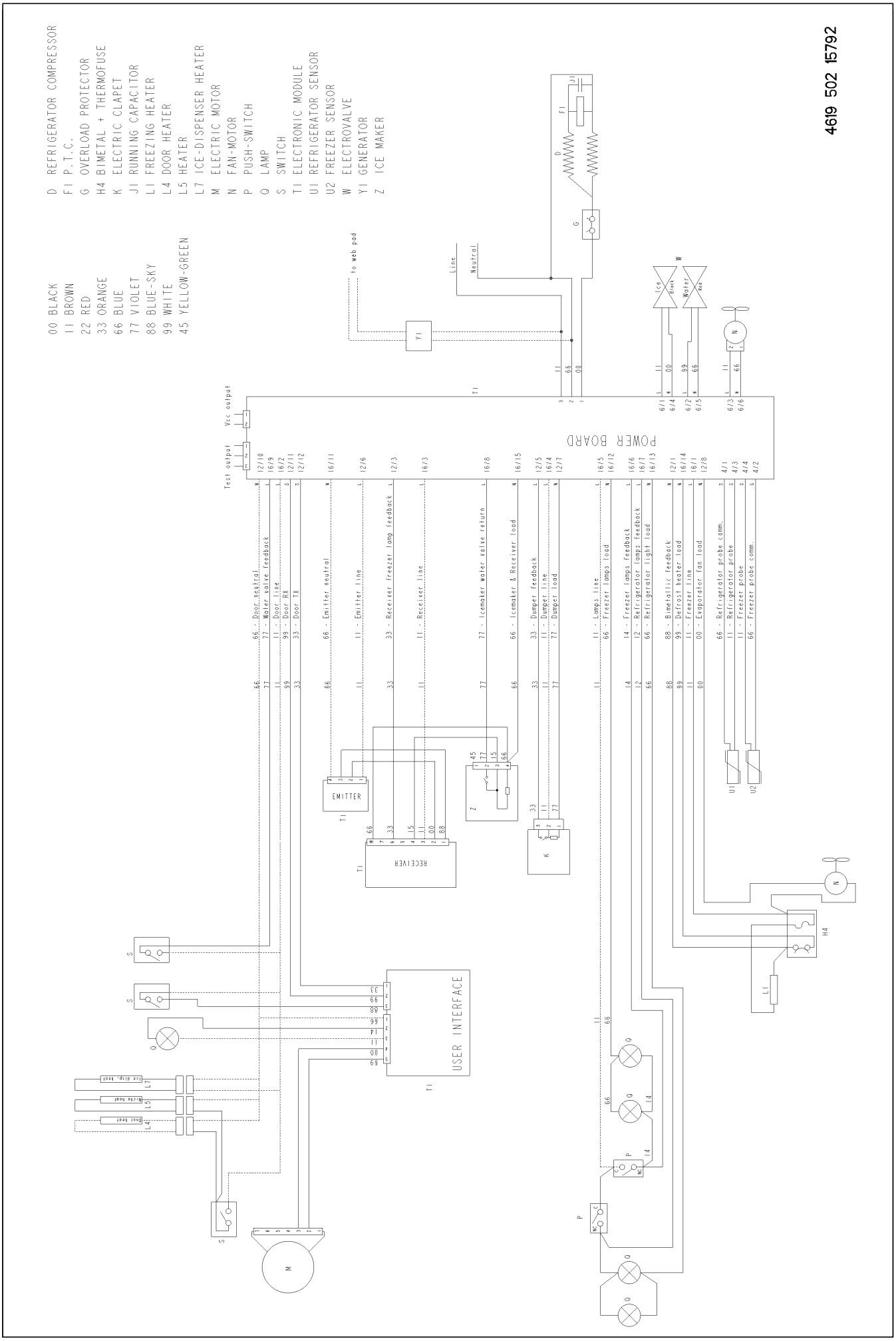
## Circuit and Wiring diagram